Hudson Reed

Towel Radiator

Installation Guide

Contents

Product Information **Page - 2**

Safety Information **Page - 3**

Installation **Page - 3/4**

Warranty Information **Page - 5**

Recycling & Disposal **Page - 5**

Contact Us **Page - 5**

DOC/IM/060/017

Product Information

• This product can only be used at PN 1MPa (10g/cm², 10 Bar). It should only be filled with water, and at a temperature below 100 °C (212°F). See table below for installation requirements.

• If the temperature exceeds 48 ºC (or 120 ºF), please show a warning sign near the product to avoid burning and scolding accidents.

• This Product is only suitable for use on indirect or sealed central heating systems including combination boilers.

To ensure you can enjoy your radiator for as long as possible, it is essential you first **FLUSH YOUR HEATING SYSTEM WITH A CENTRAL HEATING CLEANSER,** this will clear any waste from the system. Following the cleansing of the system you must **PROTECT THE SYSTEM WITH A CENTRAL HEATING INHIBITOR**. These two simple steps will greatly increase the efficiency and lifespan of your central heating system. Failure to complete these steps increases the chance of pinhole leaks, and will also invalidate the guarantee on your radiator.

Other Information

Valve installation advice :

Please ensure that your radiator valves are fitted as per the below diagrams ensuring that a bleed point always remains at the top of the unit.

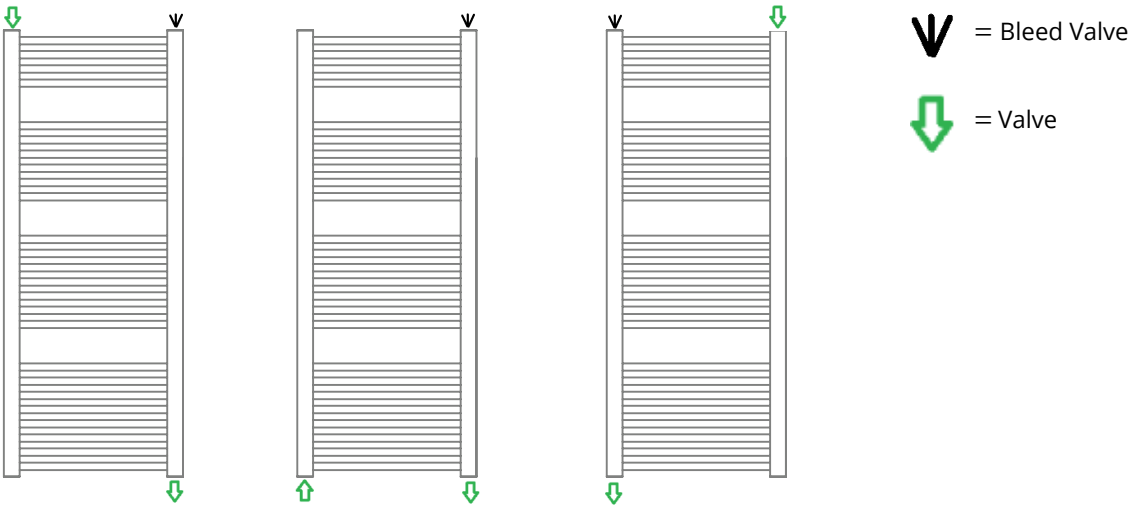

For further information on installing your radiator valves, please consult the instructions provided with them.

Safety & General Information

Please read carefully...

This product is only suitable for use on indirect or sealed central heating systems inc. Combi boilers

Do not throw away packaging until you have located and confirmed that you have all included parts. This radiator must be installed by a qualified plumber or other fully competent person.

Inspect the finish on the product for signs of damage before installation.

The provided fixings are for solid brick walls only, if installing on any other surface please check that it will safely support the product and purchase suitable fixings.

Installation

Parts Included:

STRAIGHT

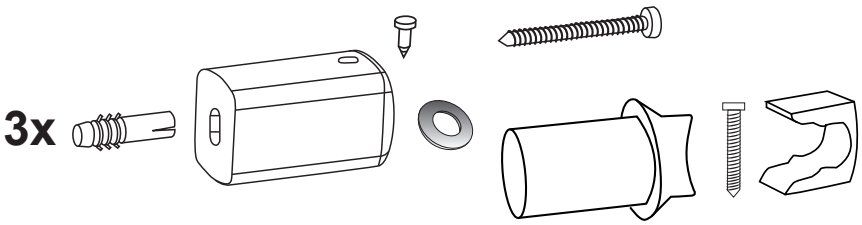

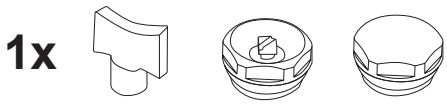

Tools required for installing:

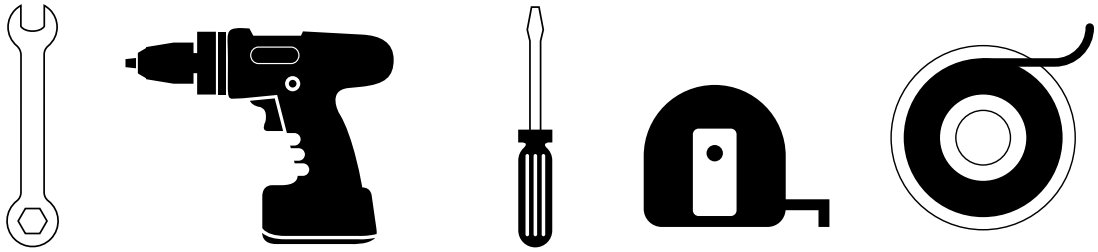

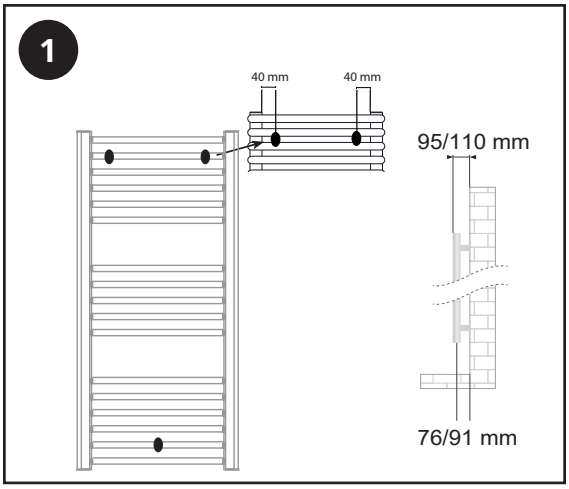
1
40 mm
40 mm
95/110 mm
76/91 mm

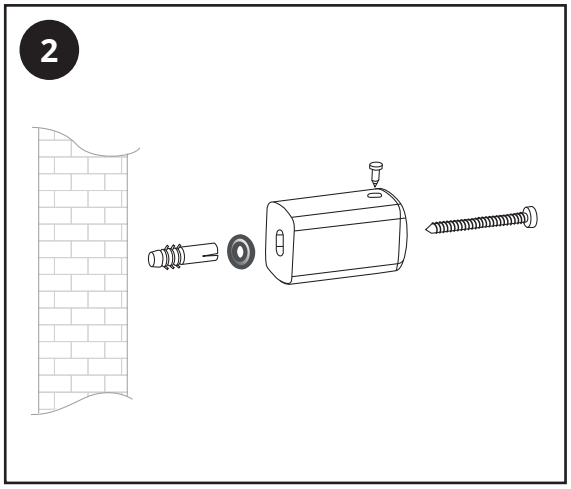
2

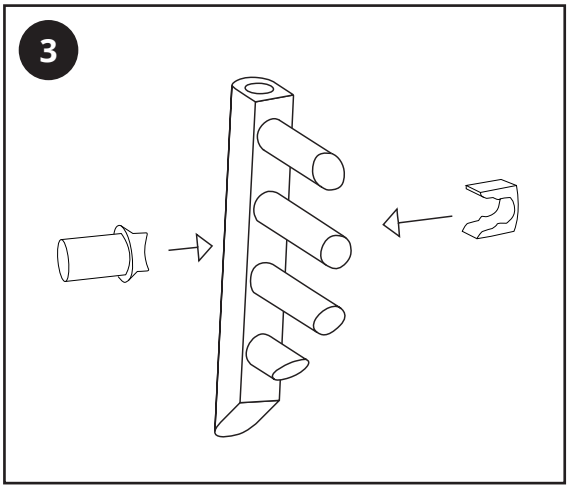
3

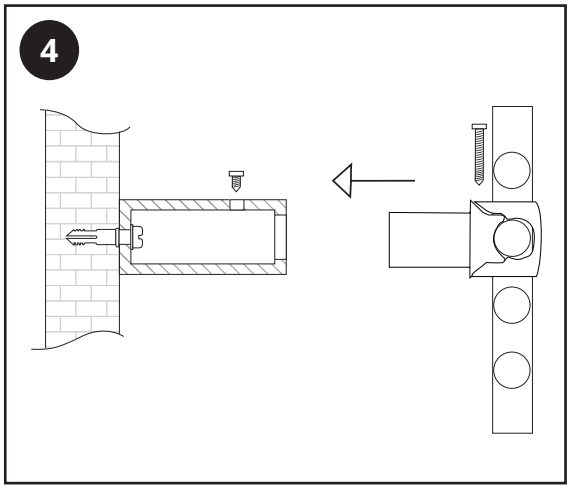
4

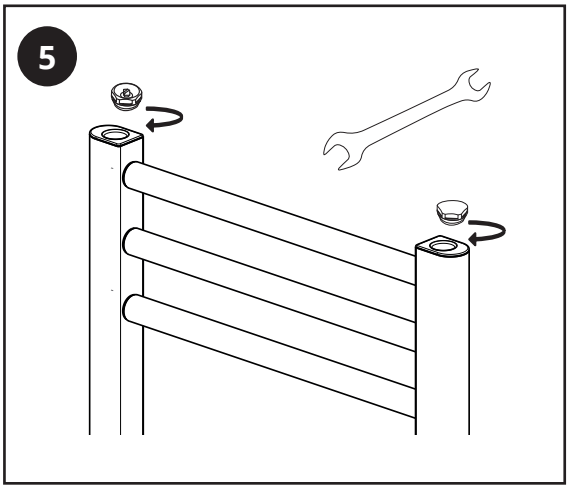
5

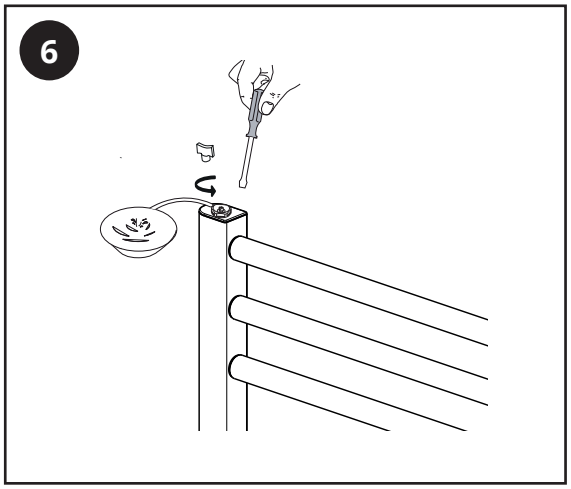
6

Aftercare

Clean any marks with a soft dry cloth, for stubborn stains please clean with mild soapy water and buff out with a soft cloth. DO NOT use abrasive or acidic cleaners, if you are unsure, please contact us first.

Your Guarantee

• To find the specific guarantee for your product please refer to the website.

• The guarantee starts from the date of purchase.

• The guarantee covers you against issues caused as a result of manufacturing related issues, it does not apply to issues that are found to be a result of poor installation.

• Labour costs for installation of the product are not covered and the guarantee does not cover you for consequential loss.

Recycling and Disposal

Please recycle the packaging in accordance with your local government regulations on waste handling and follow the same advice at the end of the products life.

Product - Steel.

Packaging - Cardboard, plastic, steel.

Contact us

Milano

Unit 1&2 Dawson Ct

Burnley

BB11 5UG